1/5TH Scale 4WD Gasoline Powered R/C Monster Truck

Specifications:

LENGTH	WIDTH	HEIGHT	WHEEL BASE	DRIVE SYSTEM	GROUND CLEARANCE	DIAMETER OF WHEEL	WIDTH OF WHEEL	GEAR RATIO	STEERING SERVO	THROTTLE SERVO
740mm	600mm	350mm	516mm	4WD Shaft Drive	72mm	212mm	140mm	1:12.6	20/30kg	15kg

Spare Parts

50004-Front Lower Suspension Arm	50005-Rear Lower Suspension Arm	50054-Front Upper Suspension Arms	50055-Rear Upper Suspension Arms	50021-Front Upper Top Plate
50008-Front/Rear Bumper	50026-F/R Shock Tower+ Susp.Arm Bush+E Clip	50030-Centre Dogbone Joint Cup	50031-Diff. Joint Cups	050009-Universal Drive Joint (Steel)
50059-Rear Hub Carrier	50013-Steering Mount (L/R)	50014-Steering Mount B	50051-Chargeable Battery Pack(6V 2500MA)	50160-Battery/Receiver Case
50161-Rear Reinforcement Plate	50046-Servo Mount(L/R)	50117-Servo Mount(L/R) 50117/50118 can be used On FUTABA/SANWA/HITECH/ KO Brand Steering&Throttel Servo	50019-Servo Top Mount	50047-Servo horn and Throttle Linkage Set
50130- Reinforecment Plate (Optional)	50205-Servo Saver/ Steering Complete	50056-Servo Link	50049-Steering Link	50002-Front Shock Absorber(Short)
50003-Rear Shock Absorber(Long)	50001-Chassis	50020-Radio Tray	50065-Roll Cage (unassemble)	50010-Center Diff. Mount

Spare Parts

50011-Centre Diff. Mount Set	50007-Gear Box	50066-Diff. Gear Cover	50075-Centre Diff. Gear Set	50064-Front/Rear Diff. Shell Set
50067-Front/Rear Diff. Gear Set	50033-Center Diff. Shaft +Washers	50074-Diff.Drive Pinion (10T)	50072-Front/Rear Drive Pinion 11T (Old)	50071-Front /Rear Crown Gear 33T (Old) For 50072 Only
50214-Made In Taiwan Steel Front/Rear Drive Pinion 11T (New)	50213-Made In Taiwan Steel Front /Rear Crown Gear 33T (New) For 50214 Only	50073-Diff.Crown Gear (30T)	50027-Diff. Gear(35T)	50116-Diff.Gear(25T)
07184-Powder Steel Gear(35T) (Optional)	07188B-Powder Steel Gear(25T)(Thick) (Optional)	07188A-Powder Steel Gear(25T)(Thin) (Optional)	50211-Powder Steel Gear (25T-A/35T/25T-B*2) (Optional)	50029-Clutch Bell Bush
50009-Fuel Tank (700CC)	50082- Exhaust pipe+ Silicone Joint Tubing	50023-Brake Discs+ Pads+Pins	50037-Brake Cam Set	50022- Spacer+ Countersunk Screw (For Engine) 5*25mm 9mm
50053-Glow Plug	50025- Wheel Mount+ Nut+Shaft	50057-Body Post	50058-Front Brace	50062-Front Sus.Arm Holder
50063-Rear Sus.Arm Holder	50036-Center Diff. Front Dogbone (Short) 123mm	50035-Dogbone 172mm (Center/Front for Dunerunner, Center/Rear for MT)	50038-Front/Rear Lower Arm Pins 6*94mm	50039-Rear Lower Arm Pins 6*61mm

50002-Front Shock Absorber Exploded View(Short)	50120-O-Ring ×2	50121-Front Shock Main Axle+Nut M3 +Pads (94mm) ×2	50122-Rear Shock Main Axle+Nut M3 +Pads (100mm) ×2
	50123-Front Shock Spring (Short) ×2	50124-Rear Shock Spring (Long) ×2	50125-Shock Body (72mm) ×2
50003R ear Shock Absorber Exploded View(Long)	50126-Shock Body (78mm) ×2	50127-Shock Plastic Parts ×2	50128-Shock Absorber Cap+Ball Mount ×2

Optional Parts

054001-Front Lower Suspension Arm (AL.)	054002-Rear Lower Suspension Arm (AL.)	050012-Front Upper Susp.Arm (AL.) (050012W)	054006-Rear Upper Suspension Arm (AL.)	054007-Sus.Arm Short Holder(F/R)(Direct Hole) (AL.) 4.0 *2P 6*99mm *2P Adjust Angel(Center&Two Side)
054008-Sus.Arm Long Holder (R) (Inside Bevel Hole) (AL.) 4.0 *2P 2P 6*99mm Adjust angel(center&two side)	050037-Rear Reinforcement Plate (AL.) (050037N)	050038-Front Upper Top Plate (AL.) (050038N)	050022-F/R Shock Tower (AL.) (050022W)	050005-Caster Mount (L/R) (AL.)
050007-Rear Hub Carrier (AL.)	050010-Futaba Servo Mount(L/R) (AL.)	050011-Servo Mount (L/R) (AL.)	054012-Servo Top Mount (AL.)	050050-Servo Saver/ Steering Complete (Al.)

Optional Parts

050015-Body Post (AL.)	054003-Center Diff. Mount (AL.)	054004-Gear Mount (AL.)	054013-Center Diff.Tray (AL.)	050060-Gear Box (AL.)
050018-Roll Cage (AL.)	054009-Front Shock Absorber(Short)(AL.)	054010-Rear Shock Absorber(Long)(AL.)	050008-Front Brace (AL.) (050008N)	054018-Steering Mount (AL.)
050061-Center Dogbone 125mm (Steel)	050062-Center Dogbone 172mm (Steel)	050033-Engine Recoil Star (AL.)	050031-Nuts Hex. (AL.)	050029-Shock Absorber Protective Cap (AL.)
050024- Polished Exhaust Pipe (AL.)	050032-Fuel Tank Cover (AL.)	050034-Engine Cover (AL.)	050028-Air Filter (AL.)	050023-Servo Horn (AL.)
050120-Servo Horn (AL.) (Optional)				

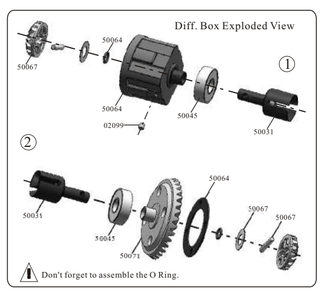

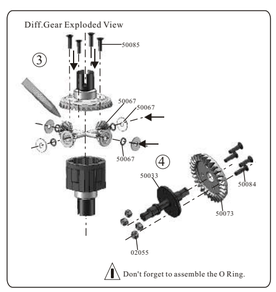

Spare Parts

50040-Upper Arm Pins 6*45mm	50041-Front Lower Arm Pins 6*65mm	50024-Diff.First Way Shaft +Second Way Shaft	50201-Buffer post	50220- Reinforecment Post (Optional)
50015-Wheel Rims Complete	50016-Tires+Insert Sponge	50017-Wheels Complete	50217-New Wheel Rims Complete	50218-New Tires+Insert Sponge
50219-New Wheels Complete	50224-Air Filter	50225-Outside Air Filter Sponges	50226-Inside Air Filter Sponges	50227-Inside/Outside Air Filter Sponges
81013-Body Clips 2.0mm	50043-Sus. Arm E- Clips Φ4*0.6mm	50044-Shock Tower Arm E- Clips Φ8*0.8mm	50068-Ball Bearing (22*10*7)	50069-Ball Bearing (24*12*6)
50045-Ball Bearing (26*10*8)	50070-Ball Bearing (22*8*7)	50076-First Way Gear Washer Φ 8*15*1.5mm	50077-Second Way Gear Washer Φ 6*12*1.5mm	50078-Servo Washers Φ3*8*0.8mm
50222-Shock Upper Ball	50112-Front Sus.Arm Ball Φ 10mm	50113-Rear Sus.Arm Ball Φ 11mm	50114-Servo Link Ball Φ8mm	50115-Steering Link Ball Φ10mm
02102-Nuts(M3) (54031)	02055-Nuts(M4) (50079)	50080-Nuts(M5)	50081-Nuts(M6)	02099-Hex Head Grub Screw(4*4) 10P (50109)
50107-Hex Head Grub Screw(6*6) 8P	50108-Hex Head Grub Screw(5*5) 8P	50110- Hex Head Grub Screw(3*3) 8P	50111-Hex Head Grub Screw(5*10) 4P	50084-Countersunk Head Hex.Mechnical Screw (4*12) 12P

Spare Parts

50085-Countersunk Head Hex.Mechnical Screw (4*16) 12P	50086-Countersunk Head Hex.Mechnical Screw (4*20) 8P	50087-Countersunk Head Hex.Mechnical Screw (4*25) 8P	50088-Countersunk Head Hex.Mechnical Screw (5*12) 12P	50089-Countersunk Head Hex.Mechnical Screw (5*15) 12P
50090-Countersunk Head Hex.Mechnical Screw (5*18) 4P	50091-Countersunk Head Hex.Mechnical Screw (5*20) 8P	50092-Countersunk Head Hex.Mechnical Screw (5*25) 4P	50101-Cap Head Hex. Mechnical Screw(3*12) 12P	50105-Cap Head Hex. Mechnical Screw(4*30) 4P
50106-Cap Head Hex. Mechnical Screw(5*15) 10P	50100-Cap Head Hex. Mechnical Screw(3*10) 8P	50103-Cap Head Hex. Mechnical Screw(4*15) 8P	50104-Cap Head Hex. Mechnical Screw(4*25) 4P	50203-Cap Head Hex. Mechnical Screw(3*5) 8P
50093-Column Head Hex. Self-tapping Screw (3*10) 12P	50202-Column Head Hex.Mechnical Screw (3*16) 12P	50096-Column Head Hex. Mechnical Screw (5*30) 4P	50097-Column Head Hex. Mechnical Screw (5*35) 6P	50098-Column Head Hex. Mechnical Screw (6*25) 8P
50099-Column Head Hex. Mechnical Screw (6*40) 4P	50095-Column Head Hex. Mechnical Screw (4*30) 4P	50118-Servo Horn Optional	50210-Servo Horn Optional	50052-Engine 23CC PRO (25CC PRO/ 26CC PRO / 28CC PRO/ 30CC PRO) Optional

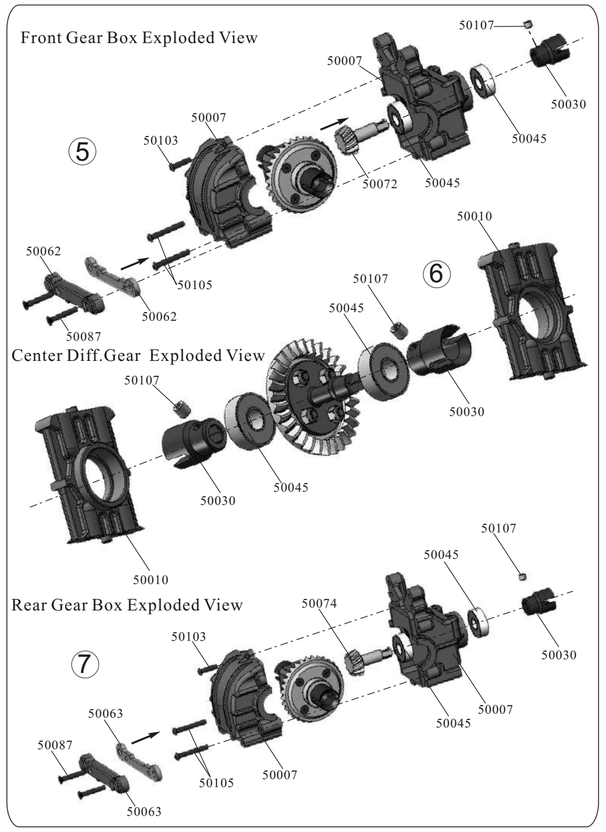

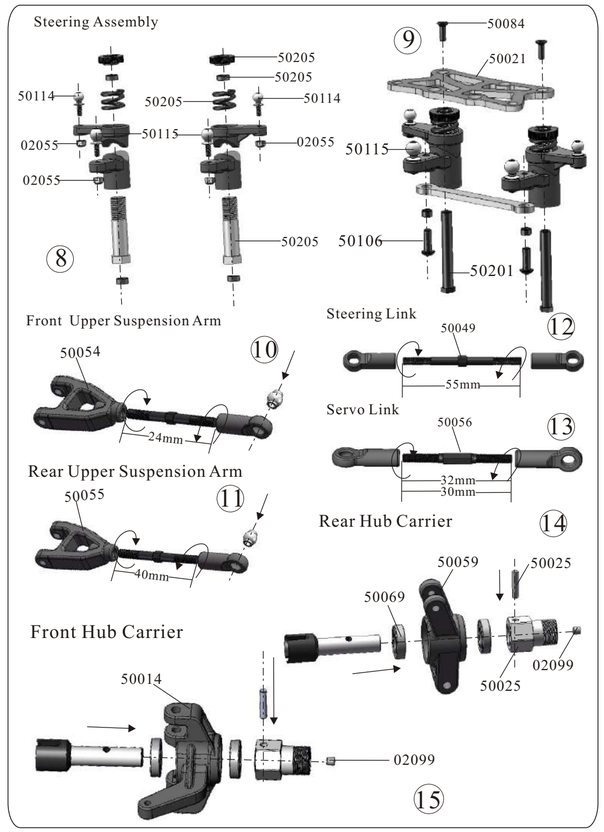

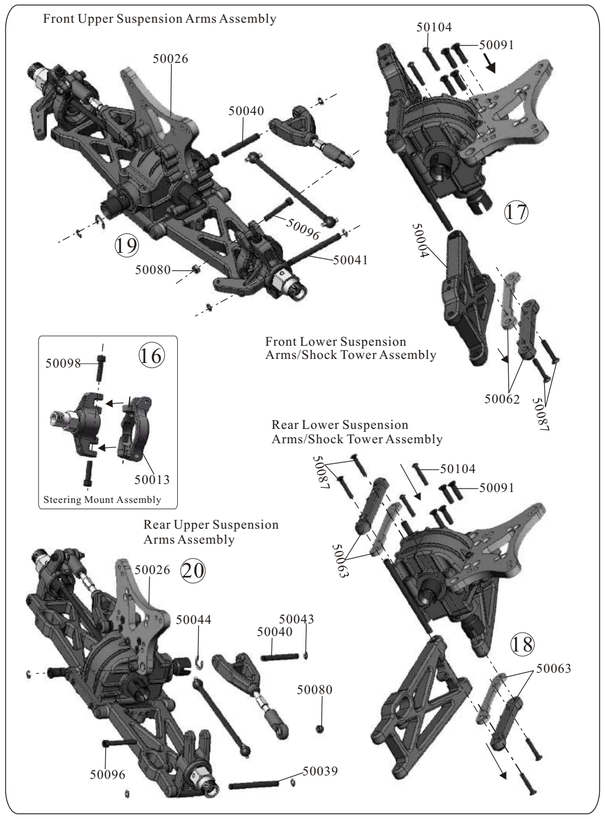
Front Upper Suspension Arms Assembly
50026
50104
50091
50040
50096
50041
50080
50004
50062
50087
Front Lower Suspension Arms/Shock Tower Assembly
50098
50013
Steering Mount Assembly
Rear Lower Suspension Arms/Shock Tower Assembly
50087
50104
50091
50063
Rear Upper Suspension Arms Assembly
50026
50044
50043
50040
50080
50096
50039
50063

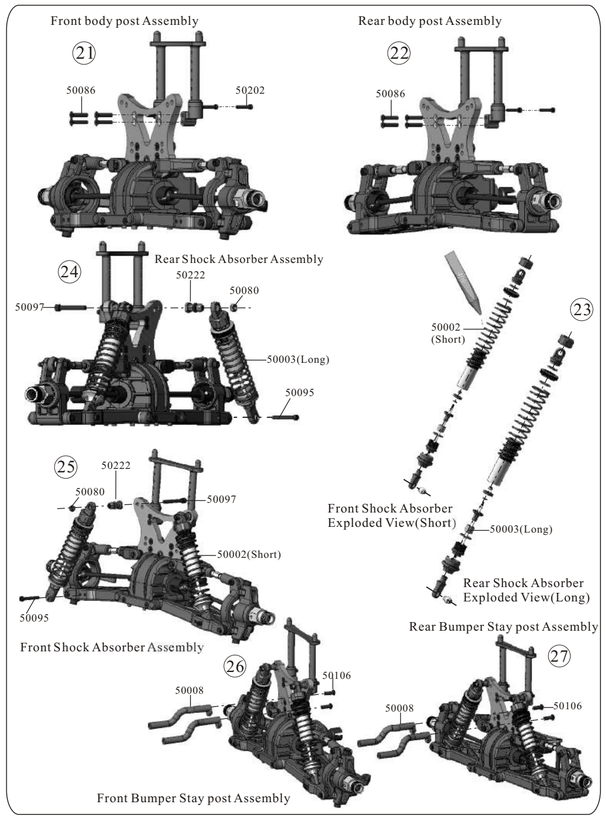
Front body post Assembly
50086
50202
Rear body post Assembly
50086
Rear Shock Absorber Assembly
50222
50080
50097
50003(Long)
50095
50222
50080
50097
50002(Short)
50095
Front Shock Absorber Assembly
50002 (Short)
Front Shock Absorber Exploded View(Short)
50003(Long)
Rear Shock Absorber Exploded View(Long)
Rear Bumper Stay post Assembly
50008
50106
50008
50106
Front Bumper Stay post Assembly

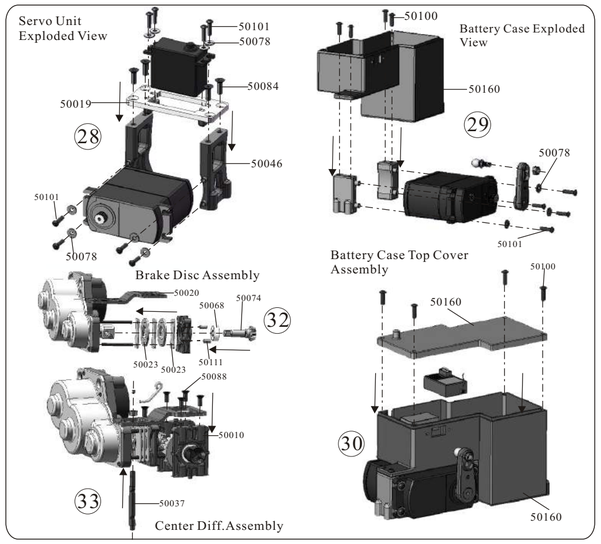
Servo Unit Exploded View
50101
50078
50084
50019
50046
50101
50078
Battery Case Exploded View
50100
50160
50078
50101
Brake Disc Assembly
50020
50068
50074
50023
50023
50111
50088
50010
50037
Battery Case Top Cover Assembly
50100
50160
50160
Center Diff.Assembly

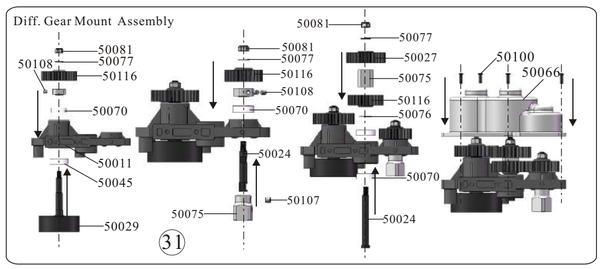
Diff. Gear Mount Assembly
50081
50077
50108
50116
50070
50011
50045
50029
50081
50077
50116
50108
50070
50024
50075
50107
50081
50077
50027
50075
50116
50076
50070
50024
50100
50066

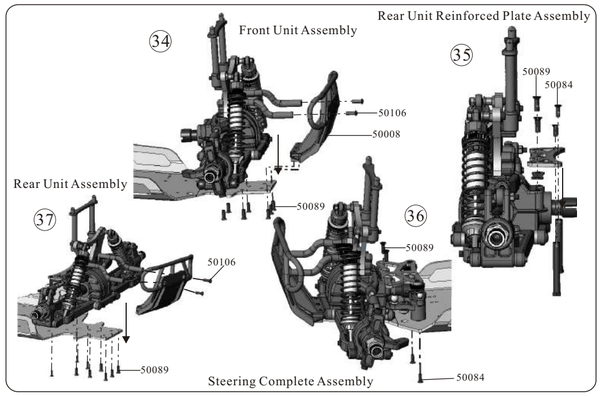
Rear Unit Reinforced Plate Assembly
Front Unit Assembly
50089
50084
50106
50008
Rear Unit Assembly
50089
50106
50089
50089
50084
Steering Complete Assembly

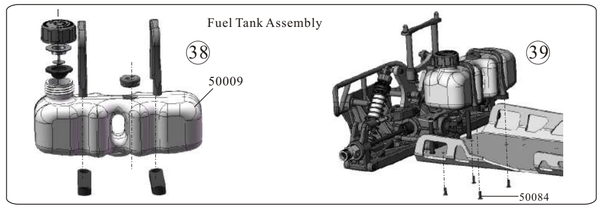
Fuel Tank Assembly
50009
50084

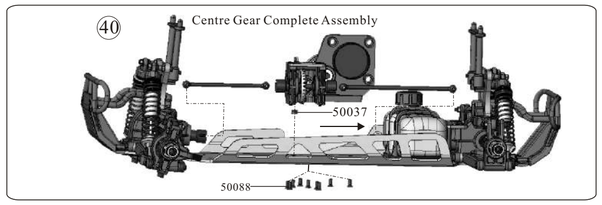
Centre Gear Complete Assembly
50037
50088

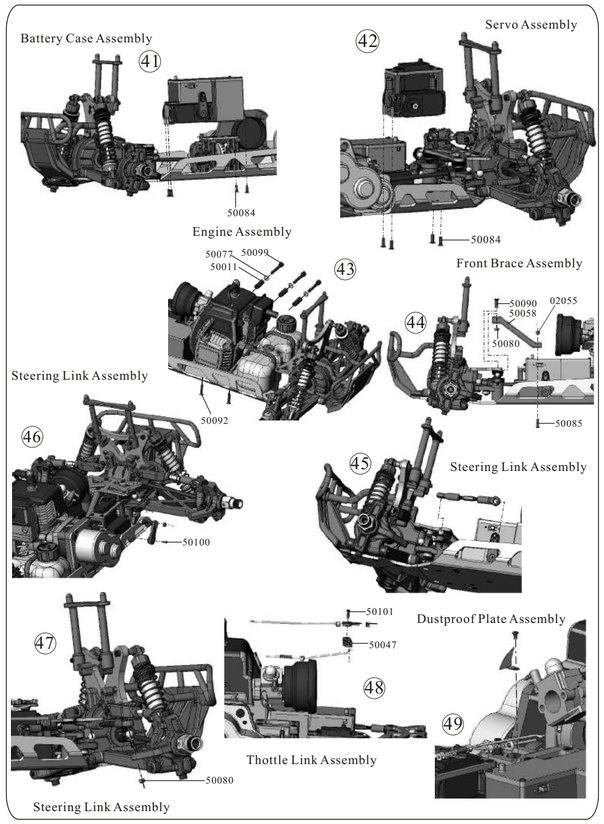
Battery Case Assembly
50084
Servo Assembly
50084
Engine Assembly
50077
50099
50011
Front Brace Assembly
50090
50058
02055
50080
50092
50085
Steering Link Assembly
50100
Steering Link Assembly
50101
50047
Dustproof Plate Assembly
Thottle Link Assembly
50080
Steering Link Assembly

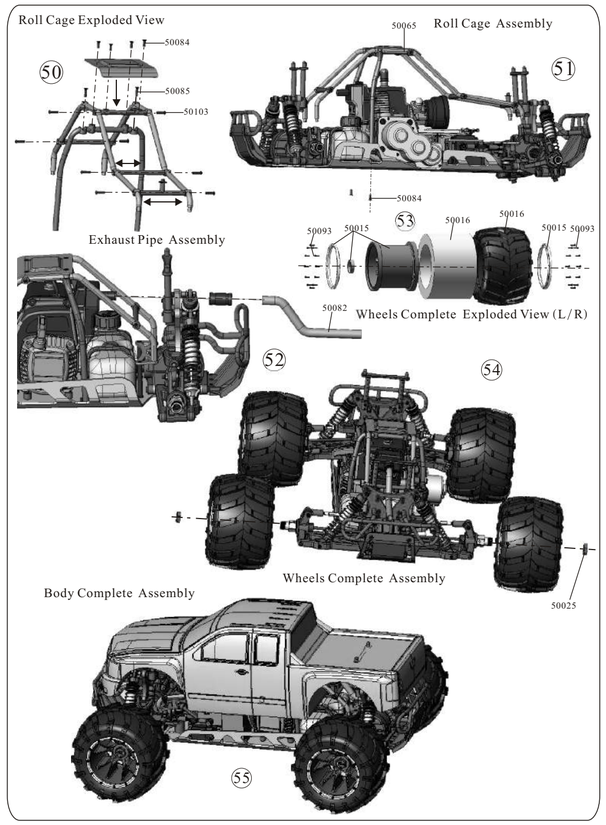
Roll Cage Exploded View
50084
50085
50103
Roll Cage Assembly
50065
50084
Exhaust Pipe Assembly
50093
50015
50016
50016
50015
50093
50082
Wheels Complete Exploded View (L/R)
Wheels Complete Assembly
50025
Body Complete Assembly

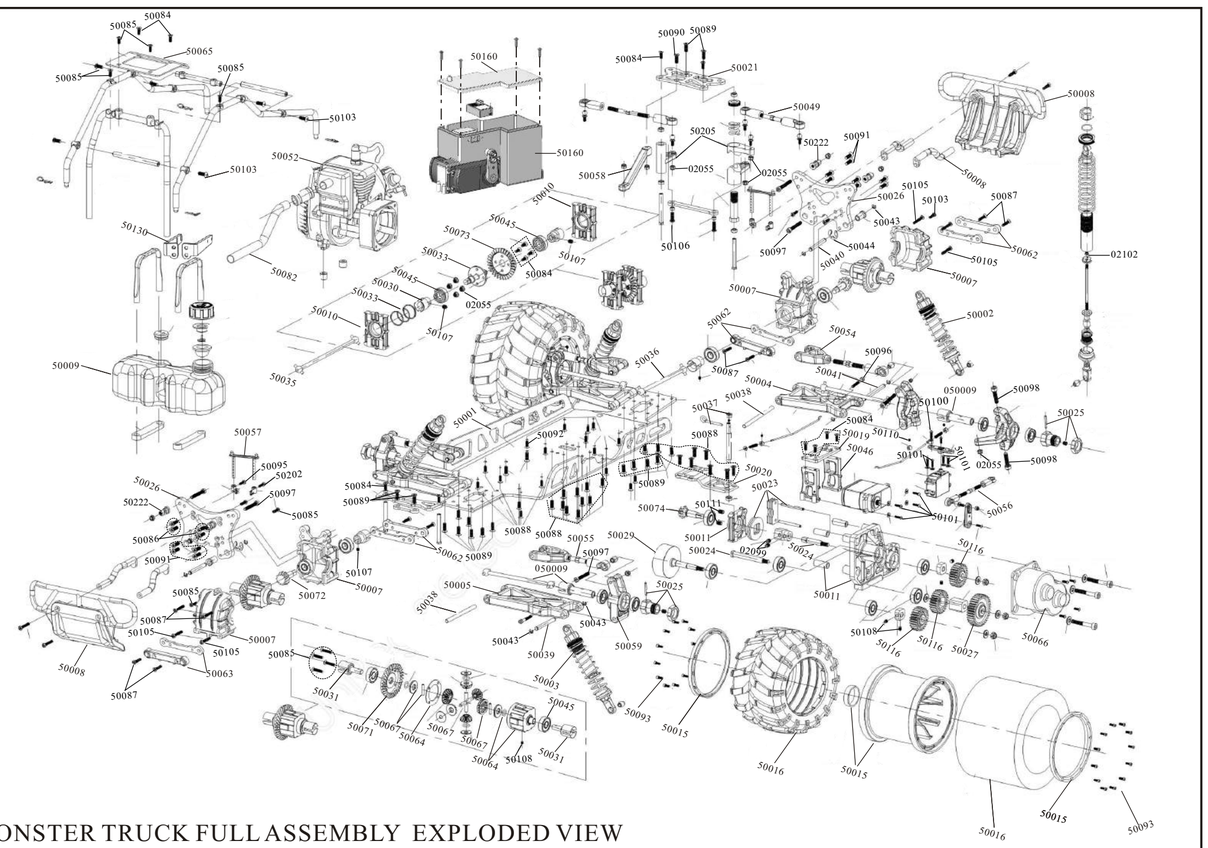
MONSTER TRUCK FULL ASSEMBLY EXPLODED VIEW

0500425